Single handle pressure
balancing valve shower set

Installation guide

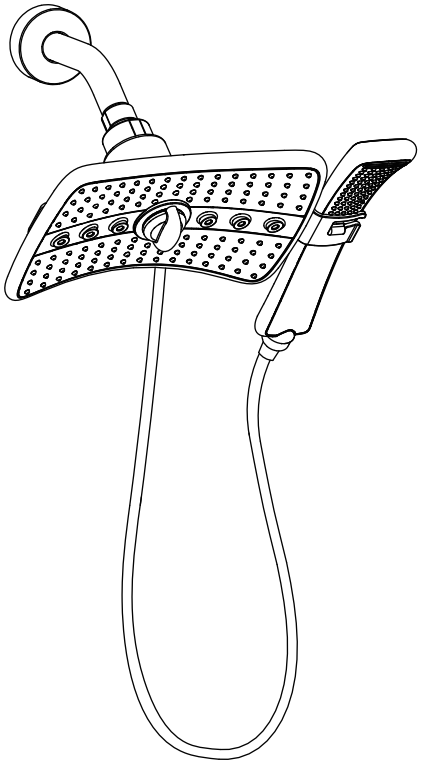

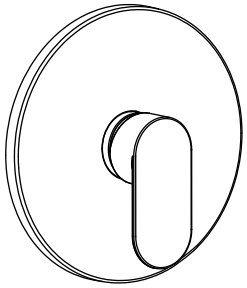

FT10350

01 Chrome plated finishing
02 Brushed Nickel finishing
06 Oil-Rubbed Bronze finishing

Thank you for choosing our products

After opening the product package, please check the accessories according to the following table and the following figure(s).
If there is any item missing, please contact us at service@brightshowers.com or info@premierbathfixtures.com

Please read the entire contents of this installation manual carefully before start.

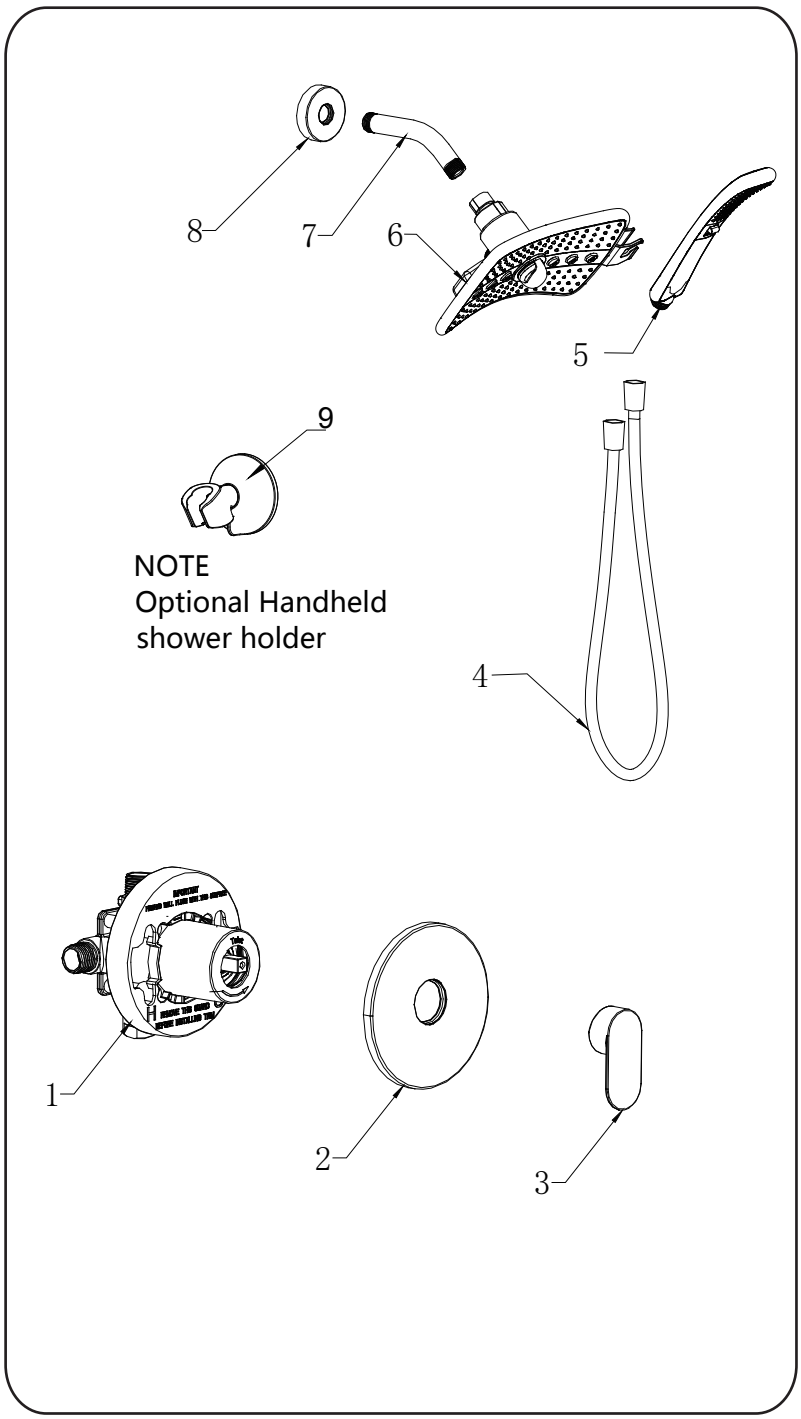

Serial number	name	quantity
1	Valve body assembly with cartridge	1
2	Trim plate	1
3	Handle	1
4	Shower hose	1
5	Handheld shower	1
6	Rain shower head	1
7	Shower arm	1
8	Shower arm flange	1
9	Handheld shower holder	1


Teflon tape


2.5mm Hexagonal wrench


Hexagon socket screw


Decorative cap


Wood screws

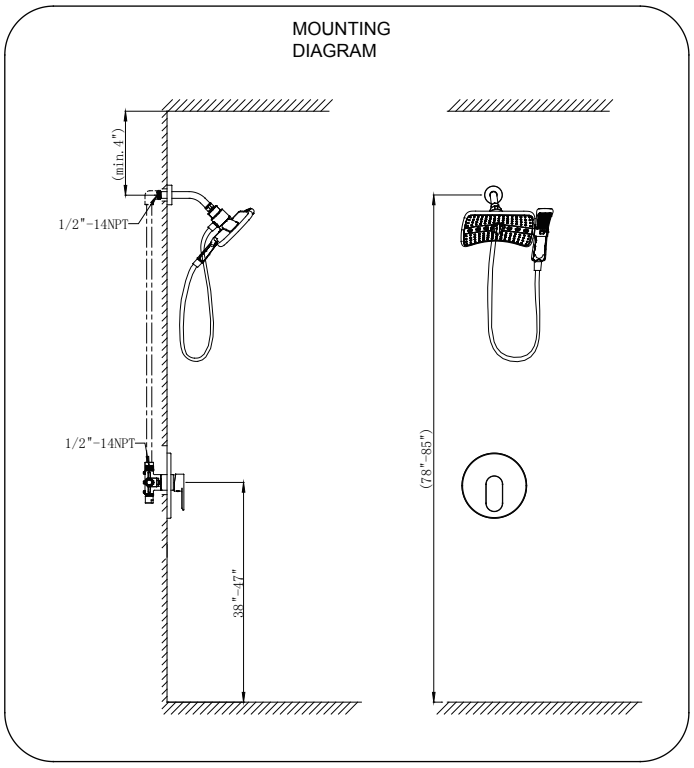

(Fig.1)

Notice to the installer

◆The installation process needs to comply with all local building and safety codes, flush all piping thoroughly before installation.

• Make sure there is enough space and lighting available during installation and service.

• Do not modify or convert this product yourself. All warranties will be void.

• Do not use pipe dope.

• Care shall be exercised when installing the device to prevent marring the exposed, decorative surfaces.

◆The hot and cold water supply pipes of the pressure balance valve must be connected correctly, the hot water supply is on the left and the cold water is on the right, and the pressure balance valve will not work properly if the connection is incorrect.

◆Applicable conditions for pressure balance valve: water supply pressure range: 0.05MPa～1MPa; applicable temperature range: 39 ℉ ～194 ℉ .

◆The supply piping to these devices shall be securely anchored to the building structure to prevent installed devices from unnecessary movement when operated by the user.

◆After installation, the valve body must be set to the maximum outlet water temperature to avoid scalding. For the specific setting method, please refer to the following [Maximum temperature setting] steps.

◆This product complies with ASSE 1016 / ASME A112.1016 / CSA B125.16 standard.

Installation may be performed at different times of construction by different individuals.

For this reason, these instructions should be left on-site with the facility or maintenance manager.

Caution: The information in this manual is subject to change without notice.

installation tool required

Phillips screwdriver, flat-blade screwdriver, adjustable wrench, tape measure or ruler, drill, pencil, sealant, thermometer

Installation steps

1. Wall set up

Determine the valve location in the wall.

For an optimal installation, the valve body (1) should be firmly fixed on the building structure (plywood backing between the support columns. Fix the valve onto the plywood backing with wood screws (Fig.2).

To ensure a proper installation of the valve inside the wall, it is very important to follow the recommended depth as indicated in the illustration (Fig.3)

Make sure the valve body is installed correctly and wrap the Teflon tape around the threads before tightening the wood screws.

Before fixing the valve onto the plywood backing, make sure it is level.

The plastic protector cap can be used as a template for setting the depth of the valve in the wall and also as a template to cut out the opening on the wall.

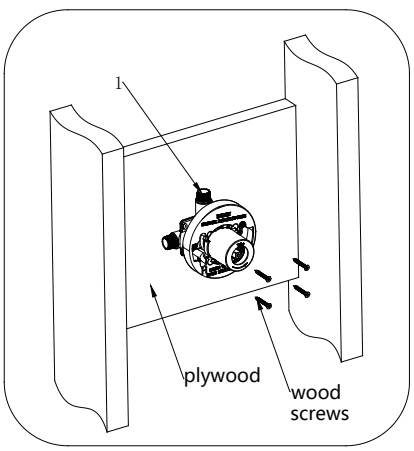

Fig.2

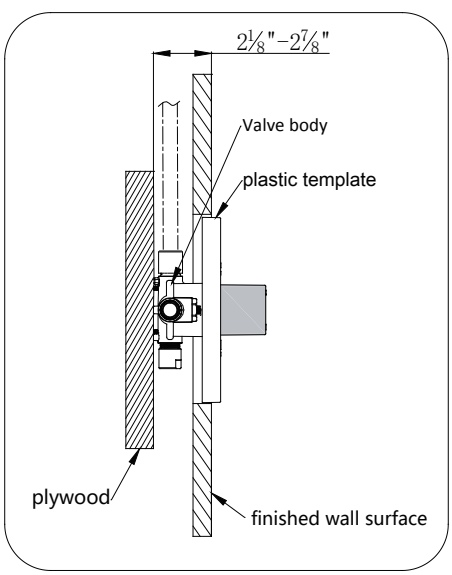

Fig.3

2. Water connection

Connect the hot and cold-water inlets and the mixed water outlets. The hot water inlet must always be connected on the left side of the valve, and the cold-water inlet must be connected to the right side of the valve. The valve body is fitted with two mixed water outlets.

Caution: Before connecting the water supply pipe, the sewage in the water inlet pipe must be discharged to prevent blockage in the mixer.
Upper position Water outlet, need to be 4" lower than ceiling minimum. Please refer to the installation drawing (Fig.1) for the installation position and dimension of the angle joint.
Once all water connections have been made, check for possible leaks.

CAUTION: When soldering during installation process, do not heat the valve any higher than the temperature required to flow solder. Excessive overheating of the valve may cause damage to the cartridge mechanism. By following this recommendation, you will be able to solder the valve without removing either the cartridge or the check stop internals. If either brazing or resistance (electric) solder is to be used, all valve internals must be removed.

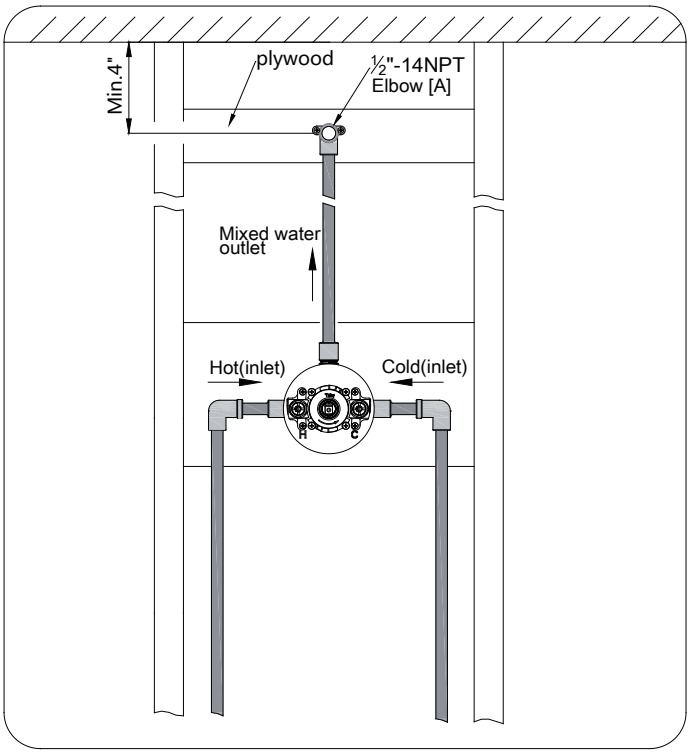

3. Sealing test

After the pipeline connection is completed, remove the protective cover, turn on the main water supply valve, then open the cartridge (the valve stem is lifted up) to flush the water outlet pipeline, then close the cartridge. Use the plug to block the water outlet, turn on the water to check if there is any leakage with each connection position. After the sealing test is completed, turn off the water and reinstall the protective cover.

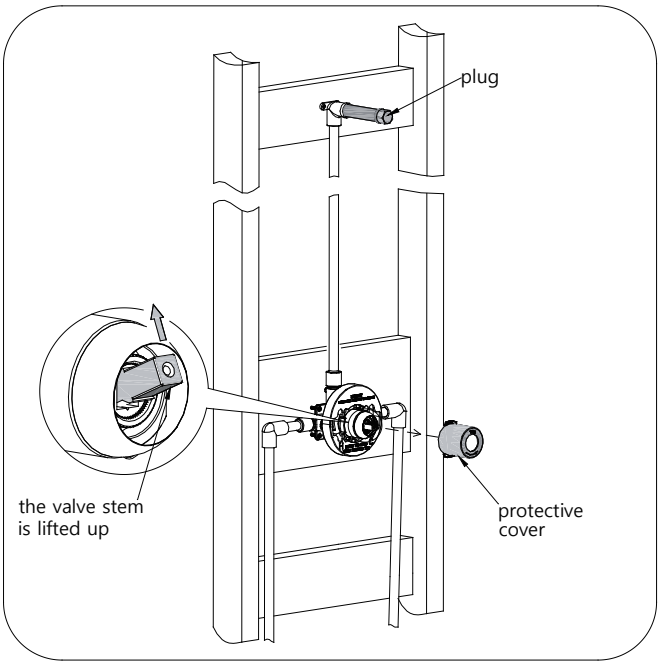

4. Wall Opening

For easy maintenance of the valve components after installation, cut out the opening on the wall by following the shape of the plastic template. This will facilitate the access for cartridge replacement and also for all recommended maintenances.

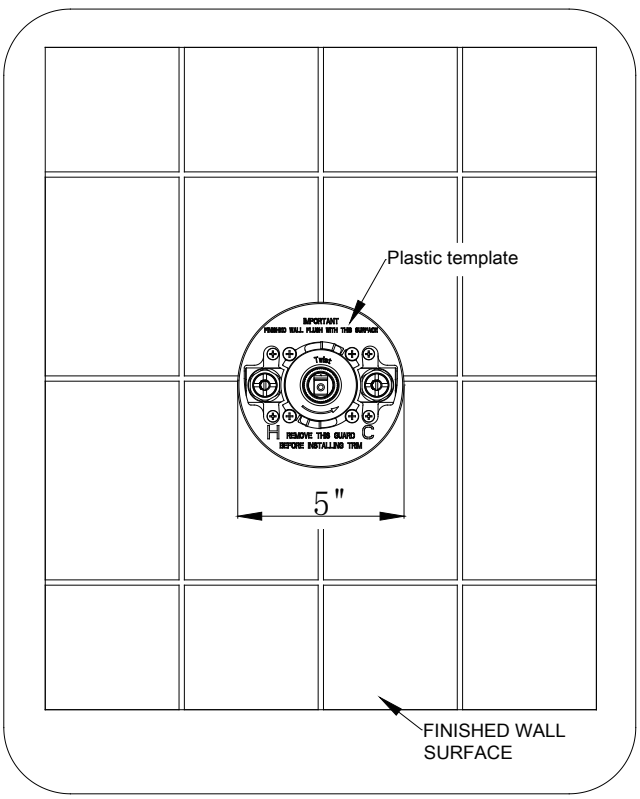

5. Installing shower arm

After finishing tile, slide the flange(8)over the shower arm(7), wrap Teflon tape at the thread position clockwise, screw the shower arm(7)into the female thread.

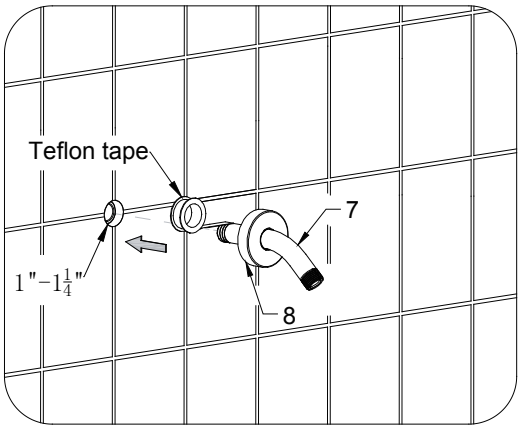

6.Remove the plastic template and protective cover

Loosen the 4 pcs screws locked on the valve body with a Phillips screwdriver counterclockwise, and then remove the plastic template and the protective covers.

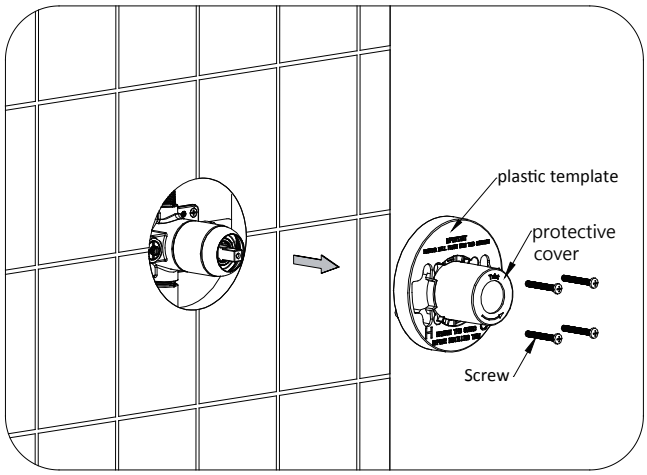

7.Installing the trim plate

Glue backside of the plate first for sealing, then slide the plate over the cylinder and secure it.

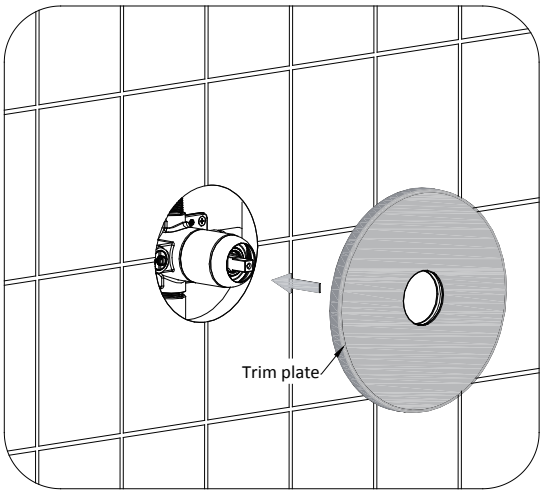

8.Installing rain shower head

Make sure the rubber washer is in position and connect rain shower head (6)to the arm(7), rubber washer does the sealing job here, no need to use Teflon tape.

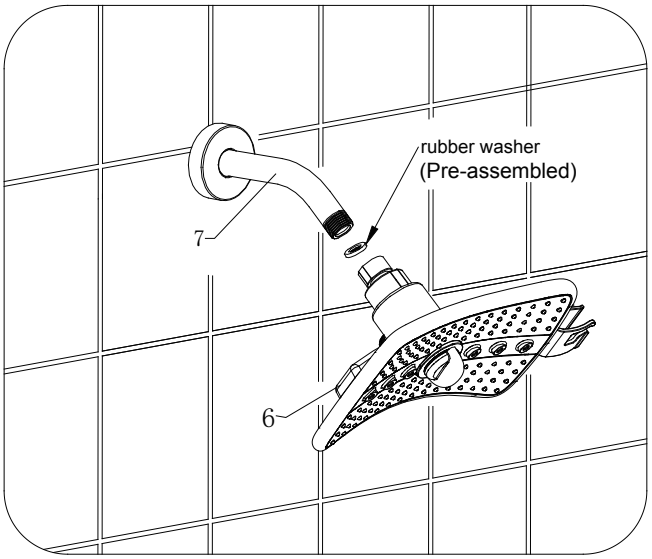

9.Installing shower hose and handheld shower head

Make sure the rubber washers at positions with the two ends of shower hose(4), connect with rain shower (6)and hand shower(5) then put the hand shower into the bracket. Please note the rubber washers do the water sealing job at these two connections, no need to use Teflon tape.

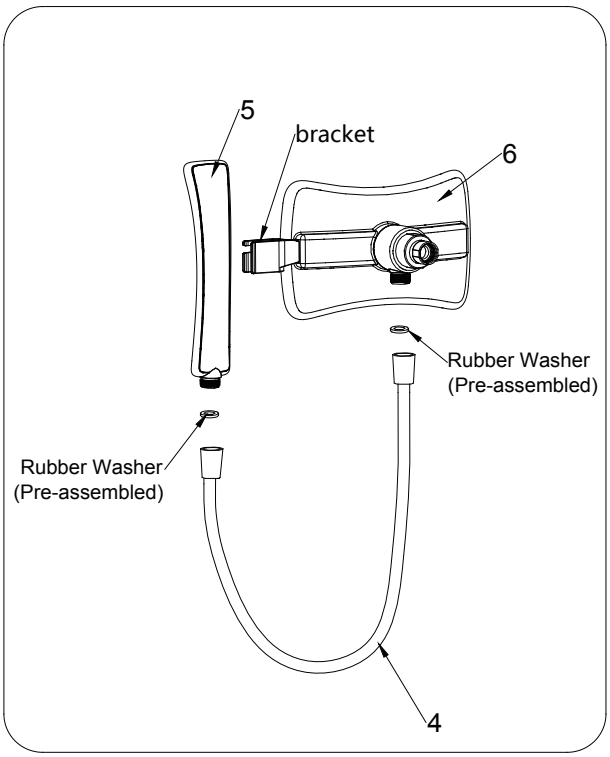

10.After the installation is completed, turn on the water and observe whether there is any leakage from the connections.

11. Maximum Temperature Setting

IMPORTANT! Setting Hot Limit Stop

It is the installer's responsibility to set the maximum output temperature of the valve to no more than 120°F, in accordance with Standard ASSE 1016/ASME A112.1016/CSA B125.16 dealing with individual thermostatic, pressure balancing, and combination pressure balancing and thermostatic control valves for individual fixtures, temperature limit setting.

Setting Limit Stop To properly set the limit ring, you must use a thermometer or calibrated sensing device to accurately measure the outlet water temperature. Remove the dome cap counterclockwise, with a flat head screw driver help, pull out the temperature stop ring from the cartridge. Gradually rotate it to the right to lower the highest temperature setting or towards the left to increase it. Once the new setting has been adjusted, reassemble handle by reversing the steps.

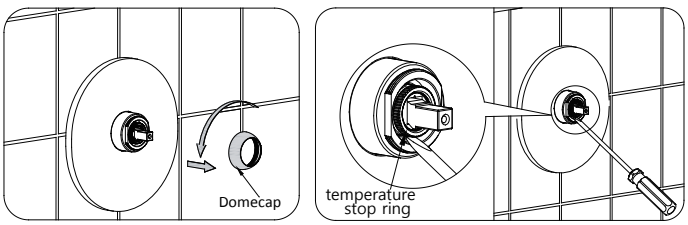

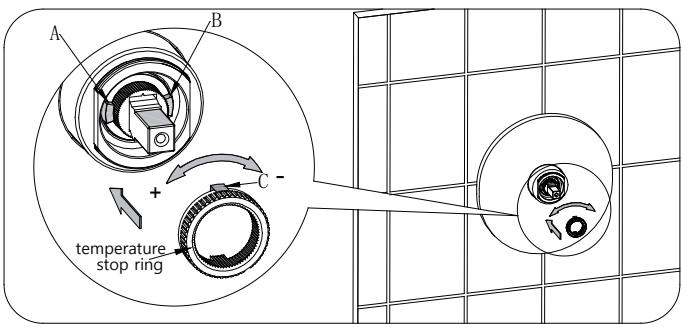

12. Installing handle

Put handle on the cartridge stem, pull up and lock the hex screw to secure the handle then put decorative cap on the handle.

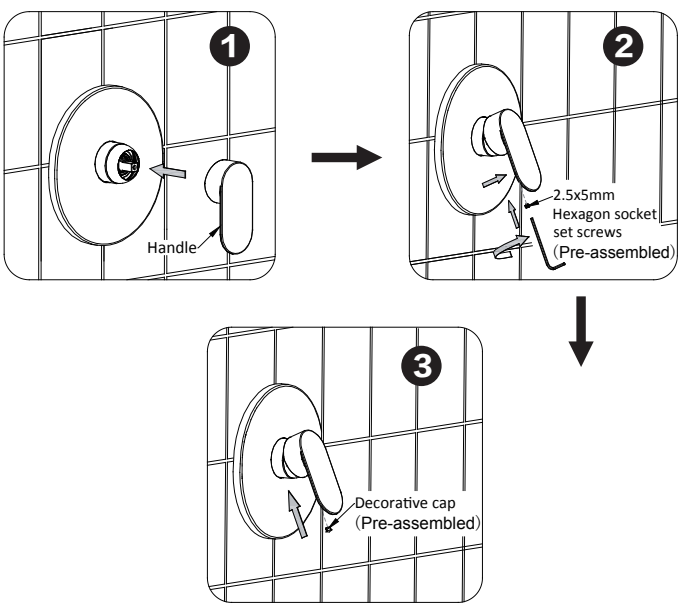

13. Extra shower head holder option

Install the optional handheld shower head holder if you need.

For handheld shower head holder, two installation options are available, please choose based on your bathroom condition.

A: For flat and smooth tiles, peel off the film on the backside of the wall bracket, stick the wall bracket to the tile.

B: For rough tile surface, use the screws, by following the steps as below.

Disassemble the wall bracket from the shower holder with a Phillips screwdriver.

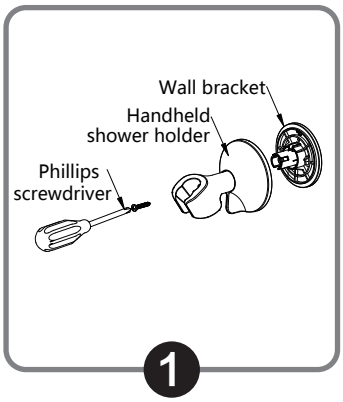

Select a suitable position on the wall to mark 2 spots with a pencil, drill two 35mm（13/8”）deep holes with a 6mm（1/4”）diameter drill bit, use the screws to fix the wall bracket.

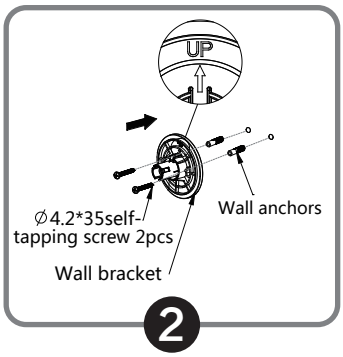

Put the holder back on the wall bracket and screw tight.

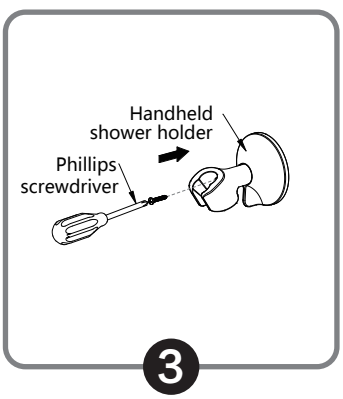

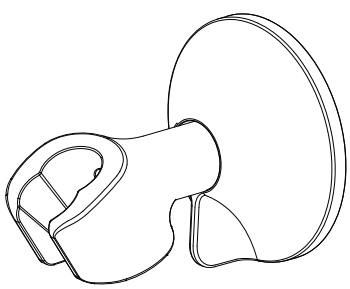

14. Rough-in Dimensions-Tub & Shower

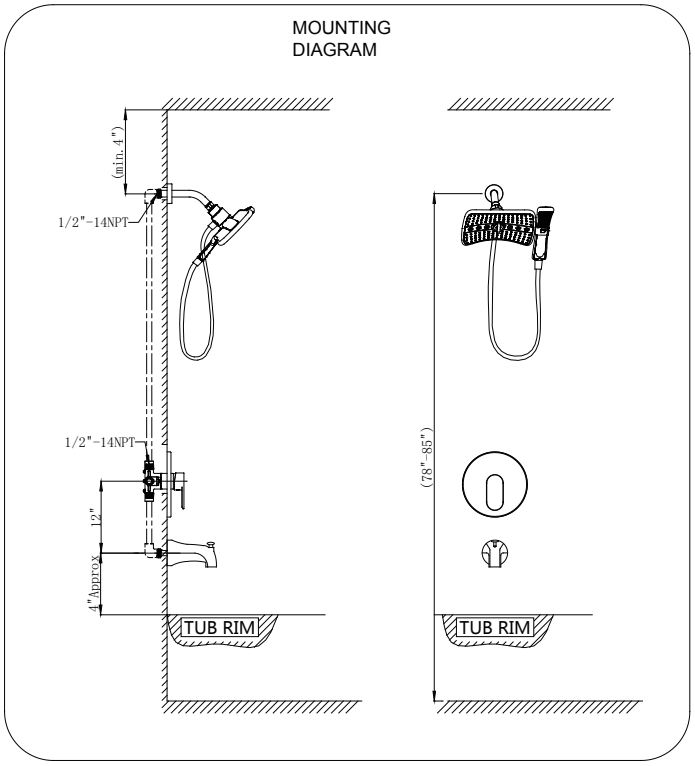

Instructions for use

Lift the handle upwards to turn on water, turn right for colder water and turn left for hotter water.

Troubleshooting

What to look for if:

● The Maximum Temperature Cannot Be Obtained:

a. Lime deposits may have accumulated in the hot water pipes, restricting the hot water supply.

b. The hot water supply temperature may be too low.

c. The handle rotation setting may be too low. Remove valve handle and readjust the high temperature limit stop.

● Flow Of Water Is Less Than Desired:

a. The inlet supply pressure(s) may be low.

b. If the shower head is with a flow restrictor, then the shower head may be clogged. Remove and clean it.

c. The check valves may be clogged.

● The Valve Opens With Hot Water Flow Rather Than Cold Water Flow:

a.The inlet water supplies are connected to the wrong ports or cartridge is installed improperly.

● The Tempered Water Is Too Cold, Although Cartridge Has Been Replaced, Or The Hot Water Temperature Is Below 115°F:

a.Raise the temperature of the hot water supply.

● Flow Of Water Is Completely Shut Off:

a. The hot or cold-water supply pressure may have failed. This valve is designed to close upon cold water supply pressure failure.

b. The check-valve may be closed. Access the check-valve and open by turning the adjustment screw fully counterclockwise.

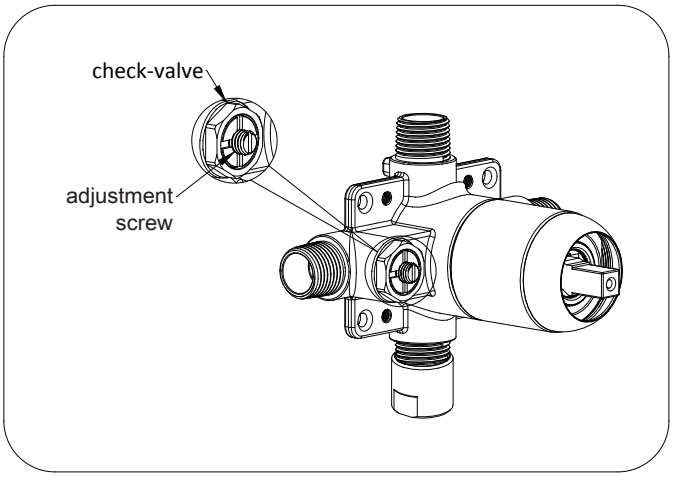

Cartridge Replacement Instructions

1. Turn off hot &cold water supply-stops.
2. Remove the handle and trim plate.
3. Remove bonnet.
4. Remove all internal components from the valve body.
5. At this point you should have an empty valve body. You are now ready to put the new cartridge into your existing valve.

Reassembly:

1. Ensure the inside of the valve body is free of deposits and debris. Clean as necessary.
2. Place the cartridge into the body ensuring following:
Align two tabs on the back of the cartridge to the grooves in the body.
3. While holding cartridge firmly, screw bonnet into body; tighten to 100 ±10 in-lbs.
4. Turn the hot and cold water supplies back on and verify there is no leakage.

Caution: CAUTION: Any repair or modification of the valve may affect the high temperature setting. The maximum temperature setting must be checked by the installer before use.

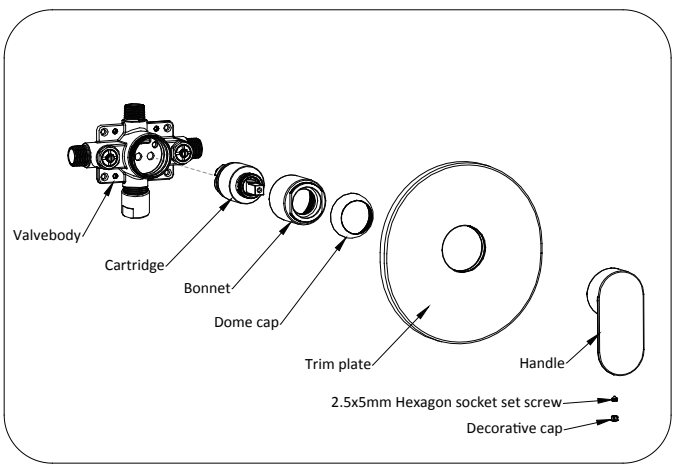

Cleaning and Maintenance

Regular inspection and cleaning of valve internal components and check valves helps ensure maximum service life and proper product function.
In order to ensure that the surface of the shower is clean and bright, please scrub with mild detergent, wash with water, wax the surface, etc. to regularly remove the surface dirt.

Do not use any acidic, strong alkaline cleaners, so as not to corrode the surface of the product.

The top spray shower and hand shower of this product are equipped with self-cleaning devices. If the water outlet is blocked when the water is discharged, just gently move the soft glue of the water outlet, and the small particles that block the hole will be flushed out by the water.

Warranty

This company warranty is strictly limited to the original consumer purchaser of the product. Proof of purchase must be provided to the Company for all limited warranty claims. Products deemed defective must be returned to our company for inspection before replacement.

The warranty period of the valve body is 10 years, the pressure balance cartridge is guaranteed for 5 years, and the hand-held, shower, hose and other accessories are guaranteed for 3 years, and the normal wear and tear of the outer surface is not covered by the warranty.

The warranty coverage of this clause does not cover the following situations:
◆ Damage caused by installation errors, product abuse, misuse, neglect, improper maintenance, abrasive wear, corrosion, and accidents caused or carried out by professionals or others.
◆ Damage caused by hard water, calcareous deposits or sediments.
Damage or loss caused by natural disasters (such as fire, earthquake, flood, lightning, thunderstorm, etc.).

The Company is not responsible for any labor or shipping costs, or damage resulting from the installation, removal, reinstallation, repair or replacement of the Company's products or components. For warranty service, please contact us. Original sales receipts must be available. The company reserves the right to change product specifications or discontinue certain models without prior notice.

bright showers

If you have any questions or concerns about this product, please don't hesitate to contact us. Thank you for choosing us as your Premier Bath Fixtures.

Email: customersupport@brightshowers.com