CLEANING & MAINTENANCE

■ To maintain proper working condition, cleaning your hand shower is required when mineral deposits appear on the spray nozzles. To remove deposits, gently rub the rubber nozzles on the face of the hand shower to dislodge.
■ To clean heavier deposits, remove hand shower and soak it face down in 1-2 cups of white vinegar(use white vinegar only)for about 2-3 hours.
■ Do not clean or rinse any part with harsh chemicals, heavy-duty cleaners, or abrasives , as they may damage the parts or the finish.

TROUBLESHOOTING GUIDE

Problem	Solution
No water flow from the installed shower head	**a. Confirm previous shower washer is not in the shower pipe.** **b. Confirm there is only one washer in the pivot ball.** **c. Confirm the shower head is not in pause mode.**
Low water pressure or missing spray patterns	**a. Clean shower head in vinegar/water solution (See Cleaning & Maintenance section).** **b. Clean the filter screen located in the pivot ball.** **c. Replace or remove the flow restrictor inside the shower head.**
Water pause mode does not completely shut off water	**For safety reasons, water drips in pause mode instead of shutting off completely. This trickle serves as a reminder that water is paused, not that the valve is fully closed. To conserve water and prevent hose damage, always turn off the water valve after use. Avoid leaving the shower head in pause mode for extended periods.**
Leaking at the pipe/pivot ball connection. 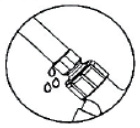	**a. Ensure that only one washer is installed in the connection and that it is flat, not bent or deformed.**  **b. Avoid over-tightening the connection, as excessive force can deform the washer or push it into the shower arm, leading to leaks.** **c. Check if the washer is damaged. If so, replace it with the spare washer or apply additional Teflon tape to the shower pipe threads.**
Leaking at Hose/Bracket or Hose/Showerhead Connections 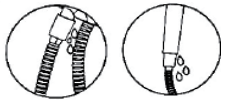	**a. Ensure that only one washer is installed in the connection and that it lies flat, without bending or deformation.** **b. Check if the washer is damaged. If so, replace it with the spare washer.** **c. Contact BRIGHT SHOWERS for a hose replacement if necessary.**
The plastic O-ring inside the shower bracket is damaged 	**The plastic O-ring around the ball joint has a deliberate crack design and is not defective.**
Bracket is too stiff to adjust the angle or too loose to hold the showerhead.	**Loosen or tighten the bracket nut with an adjustable wrench. (Contact Bright Showers for further instructions)**

bright showers

If you have any questions or concerns about this product, please don't hesitate to contact us. Thank you for choosing us as your Premier Bath Fixtures.
Email: customersupport@brightshowers.com

Installation Guide

Thanks for choosing our product!
After opening the box, please check the parts according to the following table.
Please note that each of shower heads has been tested for water pressure at our factory for quality assurance, it is normal for water stains to appear on the surface, thank you!

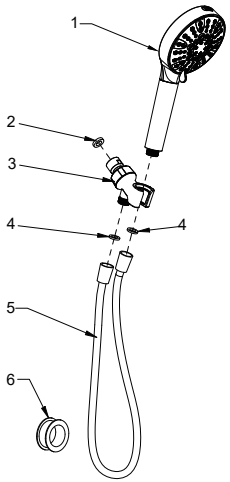

part #	name	quantity
1	Hand shower with filter	1
2	Rubber washer (Pre-assembled)	1
3	Shower arm mount	1
4	Rubber washer (Pre-assembled)	2
5	Shower hose	1
6	Teflon tape	1

INSTALLATION

1. Remove old shower head from the shower arm.
2. Clean the threads on the shower arm. There may be thread seal tape or mineral deposits on the arm, which can be removed with mild soap and water and/or an old toothbrush.
3. Wrap the white teflon tape tightly around the shower pipe evenly for 4 to 5 wraps clockwise. (please refer fig.1)
4. Screw the shower arm mount onto the end of the shower pipe threads in a clockwise direction. Insert the rubber washers (4) into the both ends of the shower hose (5) connect with shower arm mount (3) and hand shower(1) Finally, place the hand shower into the bracket. (please refer fig.2)
5. Turn on the water and check for leaks. If leaks occur, shut off the water and check the rubber washers at the connection parts and tighten further.

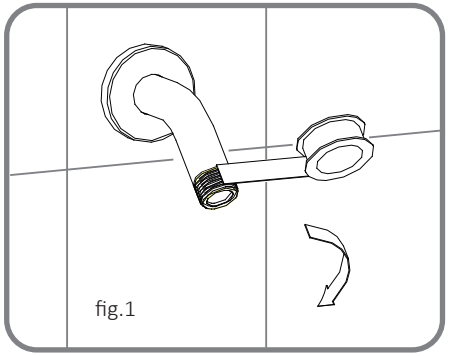
fig.1

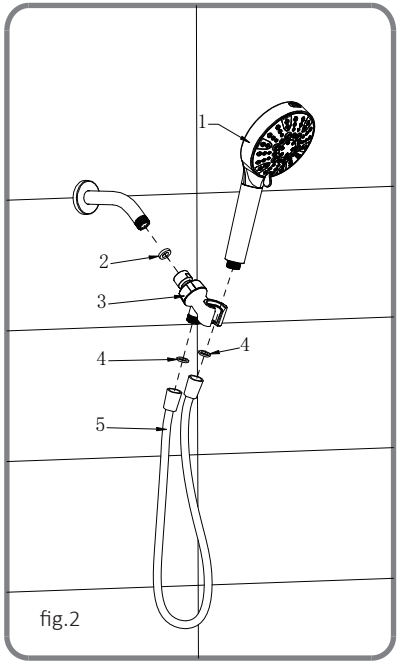

fig.2

OPERATION:

Spray Selector:

The Spray Selector allows you to choose from various spray patterns.
The spray pattern is controlled by the small lever, which rotates left and right.

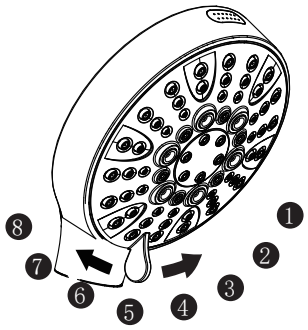

Power Wash Mode:

Press the back button to
activate the power wash mode.

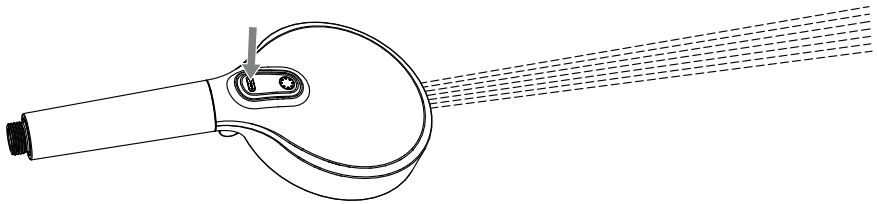

⚠ WARNINGS:

- When using the power wash mode, please be mindful of the direction of the shower head to avoid spraying water into your eyes, onto the ceiling ,or onto light fixtures.
- Always ensure the handheld shower head is properly placed in the bracket to prevent it from falling.
- The Water Pause mode does not completely stop the water, please avoid leaving the shower head in pause mode for an extended period of time.

⚠ Recommendation: Please replace the filter cartridge after using about 3-4 months.

HOW TO REPLACE THE USED CARTRIDGE

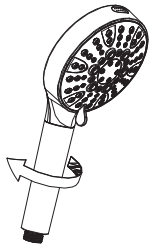

①

Step 1: Turn the handle counterclockwise to open. Remove the filter cartridge by holding the top section of the showerhead and rotating the bottom section of the handle counterclockwise. If there is debris left inside the handle, rinse the inside under a tap.

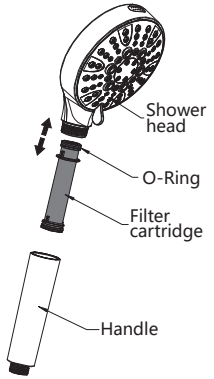

②

Step2: Insert the new filter cartridge (O-RING facing up)

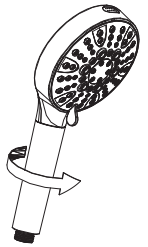

③

Step 3: Tighten the handle by turning it clockwise.

Reminder:

Regarding filtration effectiveness, testing your water for TDS does not provide an accurate indication of overall water quality.
TDS meters detect salts or impurities with positive charges in the water. Disinfection chemicals, such as chlorine and chloramines, do not affect the water´s conductivity, so TDS meters cannot measure them.

WHERE TO GET FILTER CARTRIDGES

Use the Amazon app to scan this barcode to get the purchase link for the filter cartridge, or you can search for the keyword “ Bright Showers filter replacement ”on Amazon.

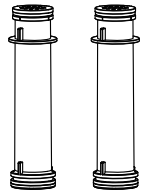

8 50059 23218 7
New -shower head filter