Installation guide

Thank you for choosing and using our products.

After opening the product package, please check the accessories according to the following table and the following figure(s).

Please note that each of shower heads have been tested with water pressure at our factory for quality assurance,it is normal if water stains appear on the surface,thank you!

REMARK:This guide is meant for the different styles of the hand showers.

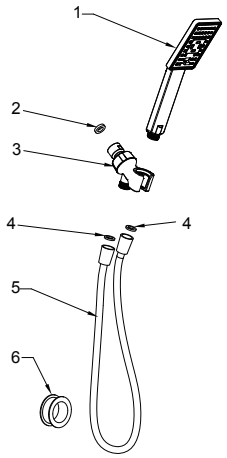

part	name	quantity
1	Hand shower	1
2	Rubber Washer (Pre-assembled)	1
3	Shower arm mount	1
4	Rubber Washer (Pre-assembled)	2
5	Shower hose	1
6	Teflon tape	1

INSTALLATION

1. Remove old shower head from the shower arm.
2. Clean the threads on the shower arm. There can be some residual thread sealing tape or mineral deposits on the arm, which can be cleaned off. using mild soap and water and/or an old toothbrush.
3. Wrap the white teflon tape tightly around the shower pipe evenly for 4 to 5 wraps clockwise. (please refer fig.1)
4. Screw the shower arm mount onto the end of the shower pipe threads in a clockwise direction. Insert the rubber washers (4) into the two ends of the shower hose (5) connect with shower arm mount (3) and hand shower(1)then put the hand shower into the bracket. (please refer fig.2)
5. Turn on the water and check for leaks. If leaks occur, shut off the water and check the rubber washers at the connection parts and tighten further.

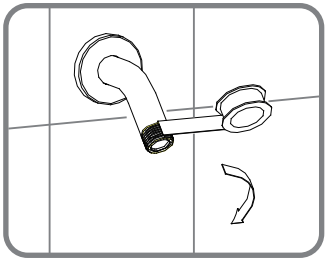

fig.1

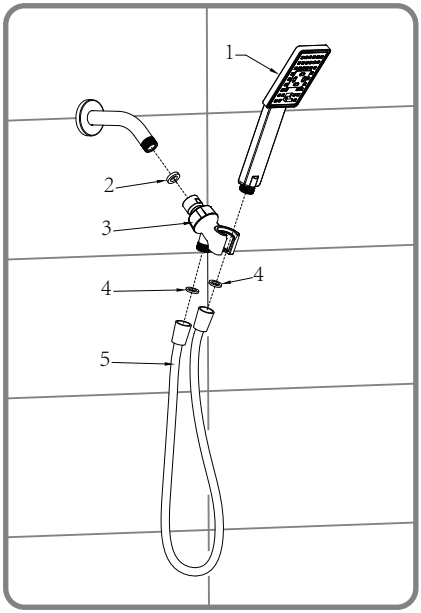

fig.2

CLEANING&MAINTENANCE

- To maintain proper working conditions, Cleaning your hand shower is required when mineral deposits hand shower appear on the spray orifices. To clean mineral deposits, gently rub the rubber nozzles on the face of the hand shower to dislodge.
- To clean heavier deposits on your hand shower, remove hand shower and soak face down in 1-2 cups of white vinegar(use white vinegar only)for about 2-3 hours.
- Do not clean or rinse any part with harsh chemicals, heavy duty cleaners, or abrasives; this may damage the parts or the finish.

bright showers

If you have any questions or concerns about this product, please don't hesitate to contact us. Thank you for choosing us as your Premier Bath Fixtures.
Email: customersupport@brightshowers.com