Installation Guide

Thank you for choosing and using our products.
After opening the package, please check the parts according to the following table.

Please note that each of shower heads have been tested with water pressure at our factory for quality assurance, it is normal if water stains appear on the surface, thank you!

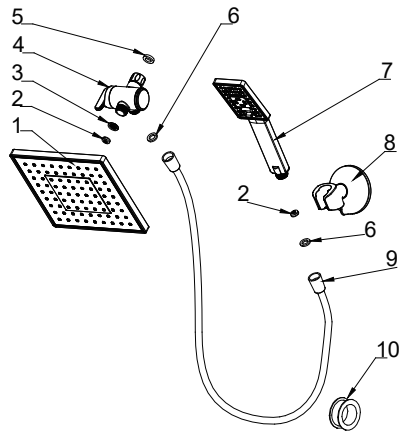

part	name	quantity
1	Rain shower head	1
2	Flow restrictor	2
3	Rubber washer with filter (Pre-assembled)	1
4	Diverter	1
5	Rubber washer (Pre-assembled)	1
6	Rubber washer (Pre-assembled)	2
7	Hand shower	1
8	Handheld shower holder	1
9	Shower hose	1
10	Teflon tape	1

INSTALLATION

1. Remove the old showerhead from the shower arm.
2. Clean the threads on the shower arm. There may be residual thread sealing tape or mineral deposits, which can be removed using mild soap, water, and/or an old toothbrush.
3. Wrap white Teflon tape tightly around the shower pipe threads, making 4 to 5 even wraps in a clockwise direction. (Refer Fig.1).
4. Attach the diverter to the shower arm by twisting it on. Then, screw the rain showerhead onto the diverter's male thread. Connect the shower hose to the other male thread on the diverter.(Refer Fig.2).

Note:Ensure that rubber washers are used at all connection points

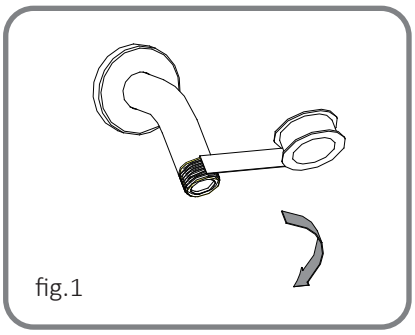

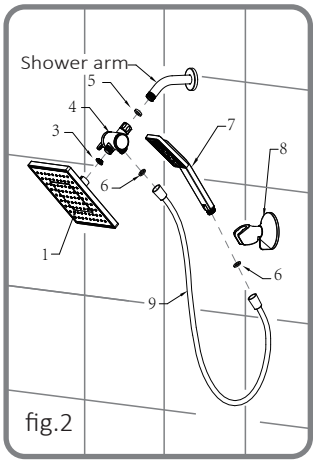

5. Install the handheld shower holder. Two installation options are available based on your bathroom conditions:
A: For flat and smooth surfaces, drill-free installation is recommended.
Clean and dry the application surface, peel off the protective film from the backside of the wall bracket and stick it firmly to the tile.
B: For walls where 3M double-sided tape does not adhere properly, please use screws instead. Follow these steps:

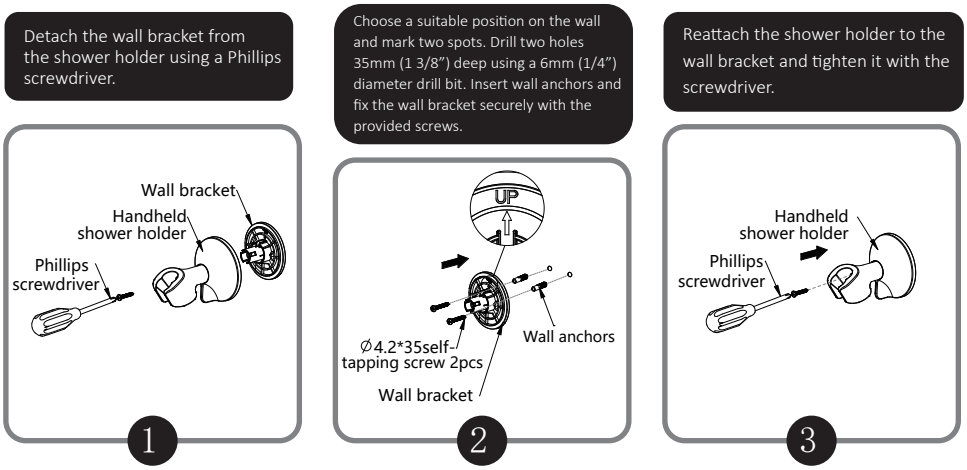

6. Turn on the water and check for leaks. If leaks occur, turn off the water and check the connections to ensure that the washers are properly placed and tighten the connections further.

CLEANING & MAINTENANCE

To maintain proper working performance, clean your shower head when mineral deposits appear on the spray nozzles. To remove mineral deposits, gently rub the rubber nozzles on the face of the shower head.
For heavier deposits, remove the shower head and soak it face-down in 1-2 cups of white vinegar (use white vinegar only) for about 2-3 hours.
Do not clean or rinse any part with harsh chemicals, heavy-duty cleaners, or abrasives, as they may damage the parts or finish.

TROUBLESHOOTING GUIDE

Problem	Solution
No water flow from installed shower head	**a. Ensure the previous shower washer is not inside the shower pipe.** **b. Confirm there is only one washer in the pivot ball.**
Low water pressure or missing spray patterns	**a. Clean shower head in vinegar/water solution. (See cleaning &maintenance section).** **b. Clean the filter screen of the washer inside the pivot ball.** **c. Replace or remove the flow restrictor inside the shower head.**
Leaking at the pipe-to-diverter or diverter-to-rain shower heads connections. 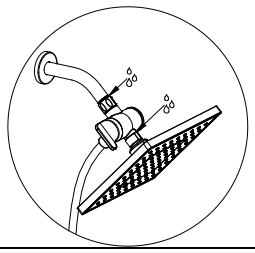	**a. Ensure only one washer is seated in the connection, lying flat without bends or damage.**  **b. Do not over-tighten the connection, as excessive force can deform the washer and cause leaks.** **c. If the washer is damaged, replace it with spare washer or wrap more Teflon tape on the shower pipe threads.**
Leaking at hose-to-diverter or hose to hand shower head connections.  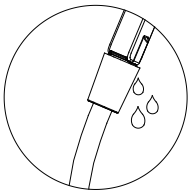	**a. Ensure only one washer is seated in the connection, lying flat without bends or damage** **b. Confirm whether the washer is damaged, and if so, replace it with the spare washer.** **c. Contact Bright Showers for a hose replacement.**
The plastic O-ring inside the rain shower head appears cracked. 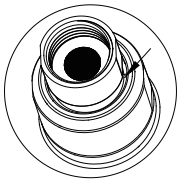	**The plastic O-ring around the ball joint has deliberate cracked design and is not defective.**
The ball joint of rain shower head is too stiff to adjust angle or too loose to hold the showerhead securely	**Loosen or tighten the rain shower head nut using an adjustable wrench. (Contact Bright Showers for further assistance)**

bright showers

If you have any questions or concerns about this product, please don't hesitate to contact us. Thank you for choosing us as your Premier Bath Fixtures.
Email: customersupport@brightshowers.com