CLEANING & MAINTENANCE

- To ensure a smooth and bright surface of the shower bar, please use mild cleaning agents to scrub, rinse with water, and wax the surface regularly to remove surface dirt.
- Do not use any acidic or strongly alkaline cleaning agents to prevent corrosion of the product surface.

When the sliding bracket becomes loose, you can use a Phillips screwdriver to tighten the screws (as shown in the figure below).

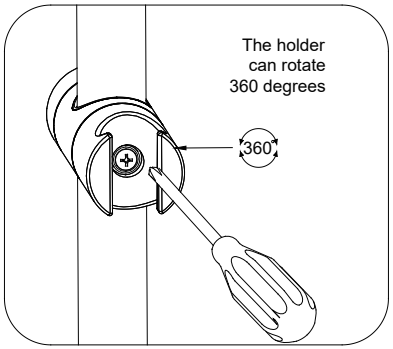

bright showers

If you have any questions or concerns about this product, please don't hesitate to contact us. Thank you for choosing Bright Showers as your trusted fixture brand.
Email: customersupport@brightshowers.com

bright showers

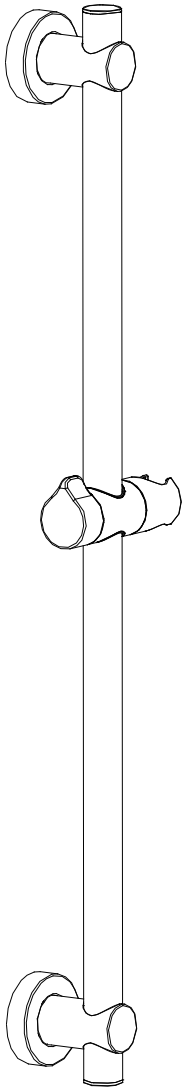

BSB1120

INSTALLATION

Installation Guide

Thank you for choosing Bright Showers.
After opening the package, please check the accessories according to the following table and the following figure(s).
If there is a shortage, Please contact us immediately at: customersupport@brightshowers.com
Please read the entire contents of this installation manual carefully before installation!
Note: Each shower head is factory-tested for quality assurance. As a result, a small amount of residual water may be present. This is normal and does not affect performance.

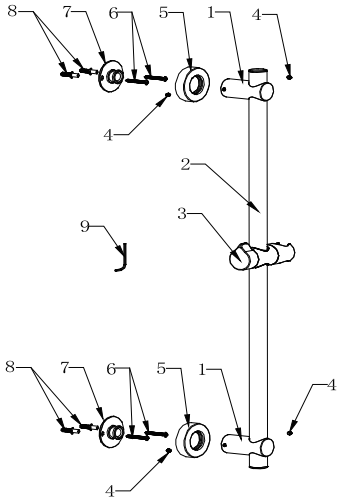

Serial number	Name	Quantity
1	Mounting Base	2
2	Stainless Steel Slide Bar	1
3	Hand Shower Holder	1
4	Hexagon Socket Screws(M5X6mm)	4
5	Decorative Cover	2
6	Self Tapping Screws	4
7	Wall Bracket	2
8	Wall Anchors	4
9	Hexagonal Wrench(2.5mm)	1

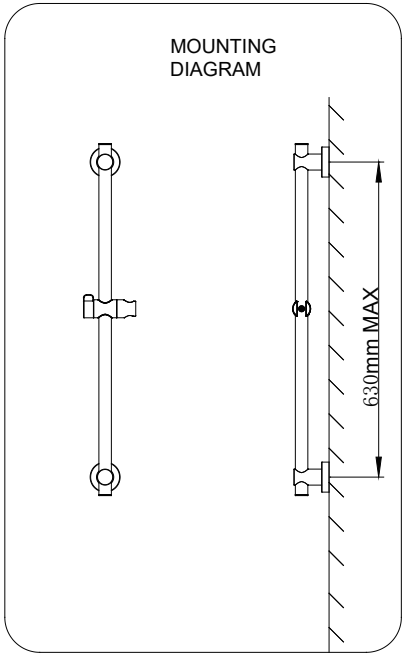

Tools Required:

- Phillips Screwdriver
- Tape Measure/Ruler
- Pencil
- Electric Drill

INSTALLATION

Installation steps

1. Mark the installation hole positions on the wall with a pencil at suitable locations. Use a 6mm (1⁄4") drill bit to bore a hole 35mm (13⁄8") deep. Then insert the wall anchors(8) into the hole and secure the wall bracket (7) with self-tapping screws (6) using a Phillips screwdriver. (Be cautious of pipes behind the wall during drilling.)

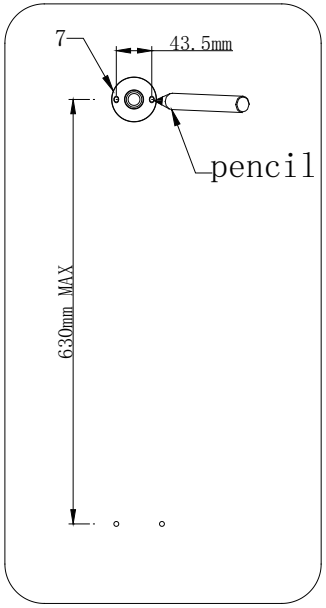

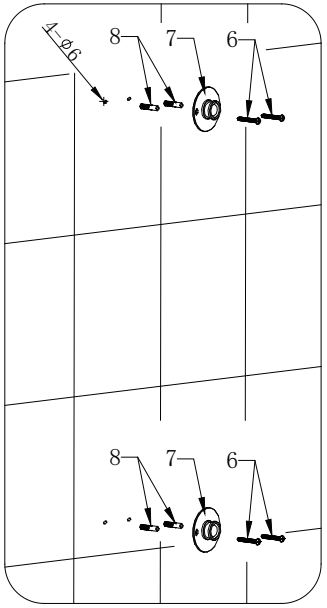

2. Attach the decorative cover (5) to the mounting base (1), then insert the mounting base (1) into the wall bracket(7) to ensure proper installation (To adjust the height of the mounting base, loosen the hexagon screw on the back of the mounting base, adjust the height, and then tighten the hexagon screw). Finally, use the hex wrench (9) to tighten the two Hexagon Socket Screws (4) on the left and right sides respectively.

